ZFG8 series Industrial Frequency/Revolution Digital Meter
User's Manual

Features:

- Big LED display, easy to read
- High measuring accuracy, stable performance
- ZFG8-**10 is for measuring frequency, revolution
- ZFG8-**10H is for measuring sine AC frequency
- Panel size: 48Hx96W mm
- Prescale coefficient setting function

For your safety, please read following content carefully before you use the meter!

Safe Caution

※ Please read the manual carefully before you use the product

※ Please comply with the below important points.

⚠ Warning An accident may happen if the operation does not comply with the instruction.

⚠ Notice An operation that does not comply with the instruction may lead to product damage.

※ The instruction of the symbol in the manual is as below:
⚠ accident danger may happen in a special condition.

⚠ Warning

1. A safty protection equipment must be installed or please contact with us for the relative information if the product is used under the circumstance such as nuclear control, medical treatment equipment, automobile, train, airplane, aviation and equipment etc. Otherwise, it may cause serious loss, fire or person injury.
2. A panel must be installed; otherwise it may cause creepage (leakage).
3. Do not touch wire connectors when the power is on, otherwise you may get an electric shock.
4. Do not dismantle or modify the product. If you have to do so, please contact with us first. Otherwise it may cause electric shock and fire.
5. Please check the connection number while you connect the power supply wire or input signal, otherwise it may cause fire.

⚠ Caution

1. This product cannot be used outdoors. Otherwise the working life of the product will become shorter, or an electric shock accident may happen.
2. When you connect wire to the power input connectors br signal input connectors, the moment of the No.20 AWG (0.50 inm2) screw tweaked to the connector is 0.74n.m - 0.9n.m. Otherwise the connectors may be damaged or get fire.
3. Please comply with the rated specification. Otherwise it may cause electric shock or fire, and damage the product.
4. Do not use water or oil base cleaner to clean the product. Otherwise it may cause electric shock or fire and damage the product.
5. This product should be avoid working under the circumstance that is flammable, explosive, moist, under sunshine, heat radiation and vibration. Otherwise it may cause explosion.
6. In this unit it must not have dust or deposit; otherwise it may cause fire or mechanical malfunction.
7. Do not use gasoline, chemical solvent to clean the cover of the product because such solvent can damage it. Please use some soft cloth with water or alcohol to clean the plastic cover.

1. Model Illustration

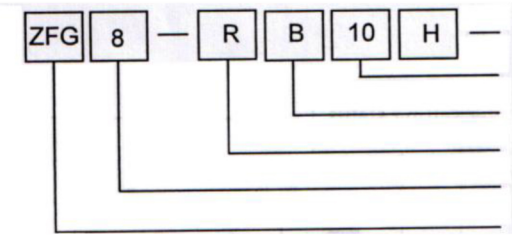

Blank: Frequency! Revolution IA: Industrial frequency

10: Design code

A: Display only B: One alarm output

R: With Relay output Blank: Display only

Panel size: 48Hx96W

ZFG: ZFG series frequency/revolution, industrial frequency meter

2. Model Indication

Model	Size	Display	Function	Input signal level	Alarm
ZFG8-A10	48H*96W	Dual row 4 digit	Frequency, revolution	L:0 ～ 2Vdc H:5 ～30Vdc	No alarm
ZFG8-RBIO	48H*96W	Dual row 4 digit	Frequency, revolution	L:0 ～ 2Vdc H:5 ～30Vdc	One alarm
ZFG8-AIOH	48H*96W	Dual row 4 digit	Industrial frequency	60 ～450VAC	No alarm
ZFG8-RB1O H	48H*96W	Dual row 4 digit	Industrial frequency	60 ～450VAC	One alarm

3. Technical Parameters

Function	To measure frequency
Input mode	Frequency/Revolution: L: 0 ～2VDC, H: 5 ～30VDC. Industrial Frequency:60 ～450VAC
Measuring range	Frequency:0.1 ～5000Hz,Industrial Frequency:0.1 ～1000Hz,Revolution:6 ～9999RPM
Measuring accuracy	+0.1% (25°C±5 V)
Power consumption	<3VA
Input impedance	ZFG8-**10>10K Ω , ZFG8-**10H>300K Ω
Decimal point	Frequency/Industrial Frequency: 00. 00 ～0000 (Float decimal point), Revolution: No decimal point .
Responsing speed	About 0.5S
Max.Display	9999
Operating humidity	<85% RH
Operating temperature	0 ～ 50°C
Power supply	AC 110V/220V 60/50Hz
Dimension	48mm(H)x96mm(W)x100mm(L)
Weight	350g
Insulation strength	AC 2000V 1 min
Insulation impedance	DC 500V >100M Ω

4. Panel Indication

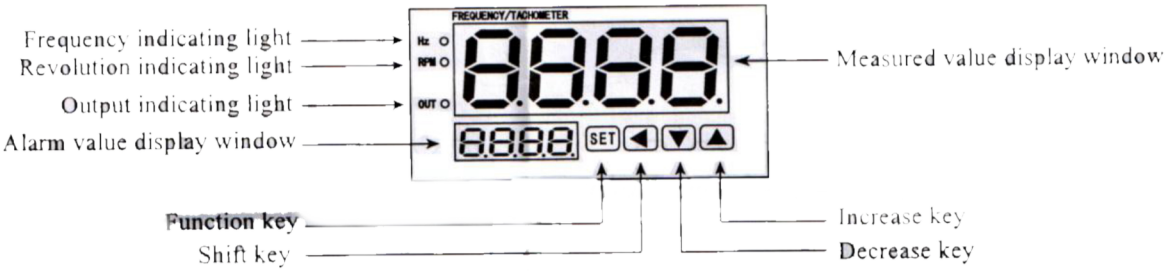

5. 0utput logic chart

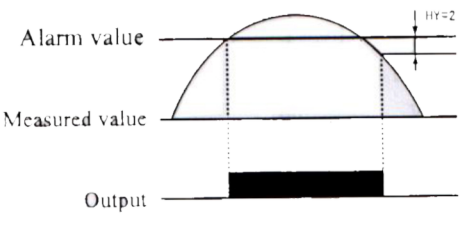

H（Upper limit alarm）

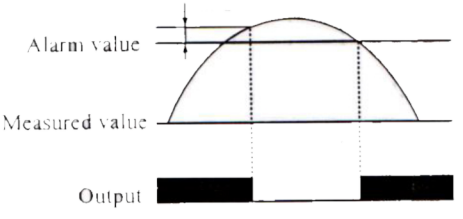

L（Lower limit alarm）

6.0operation Sequence

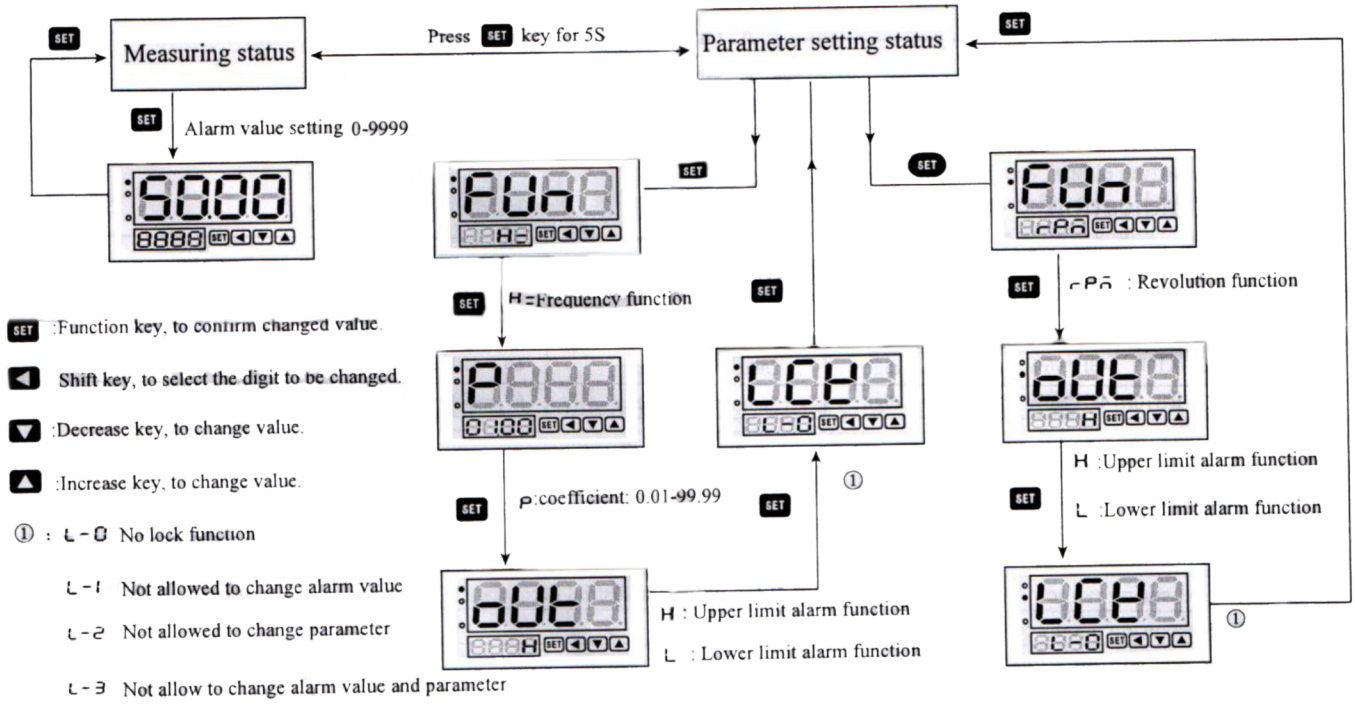

7. Dimension

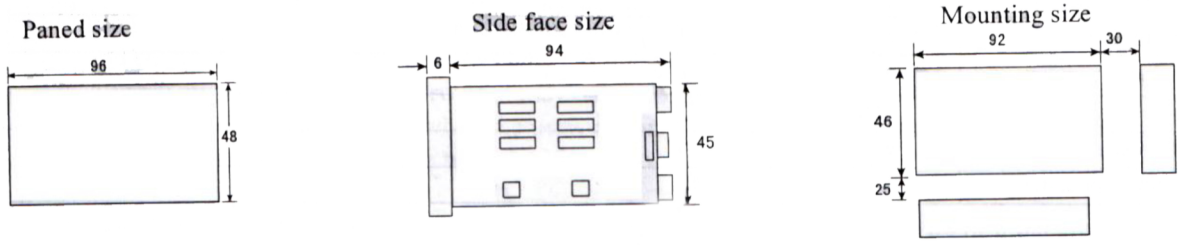
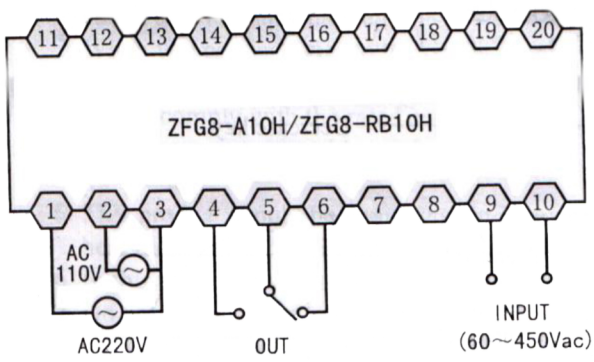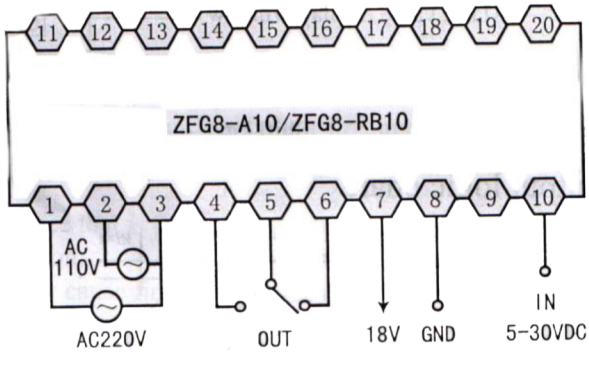
8. Connecting Drawing